型式 1

Medium 1

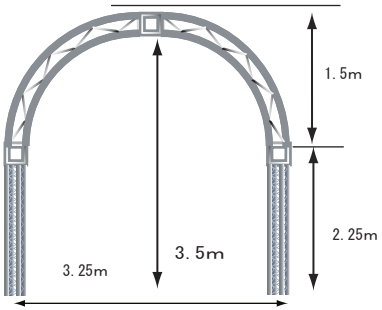

Medium 2

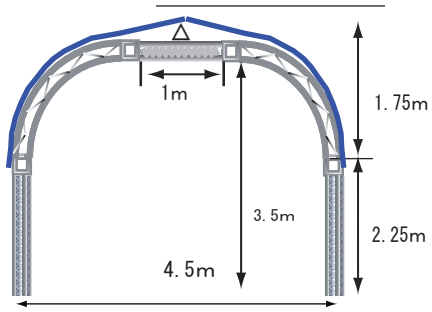

Medium 3

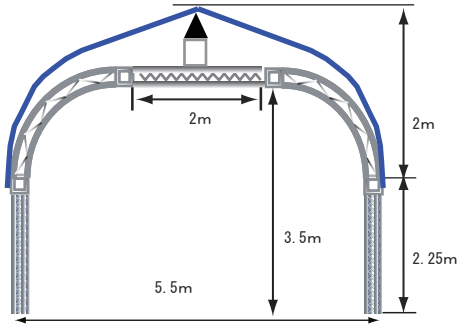

Medium 2 Steeple

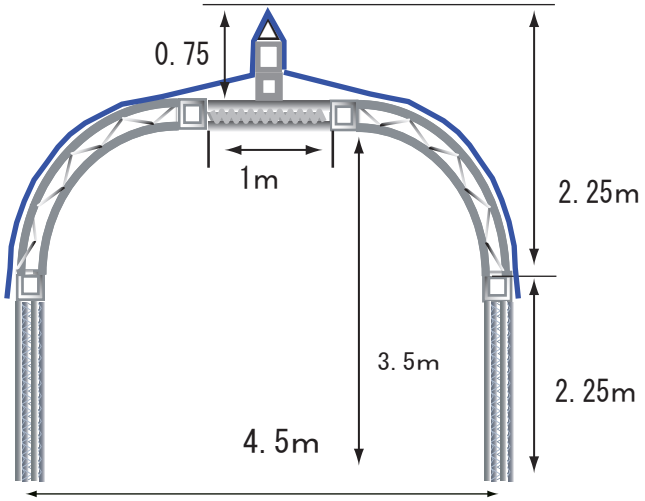

Stage

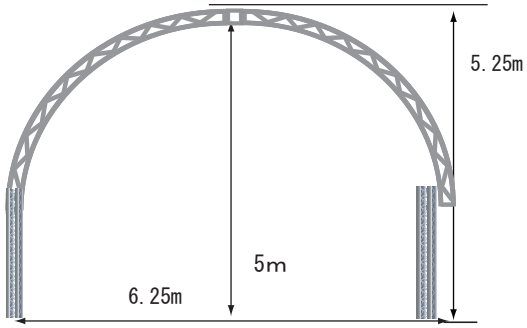

Medium 4

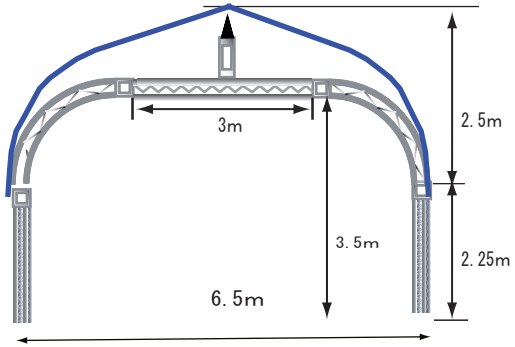

型式 2

Circle roof

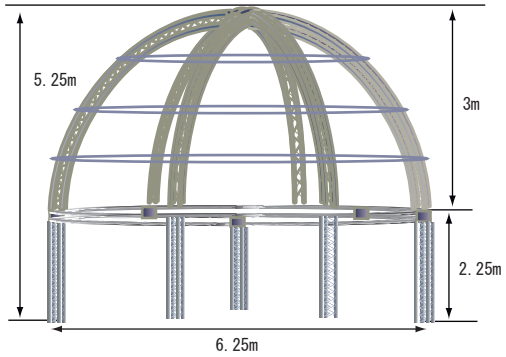

Large 2

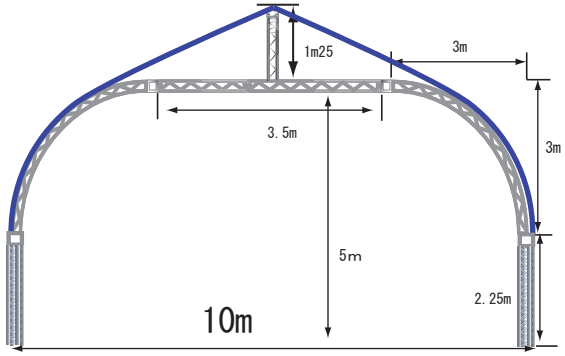

One Flow

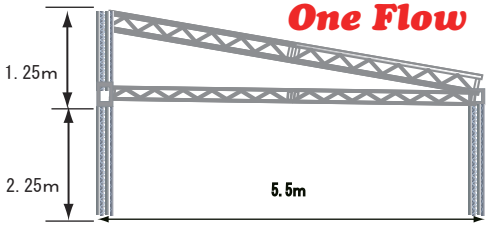

Large 1

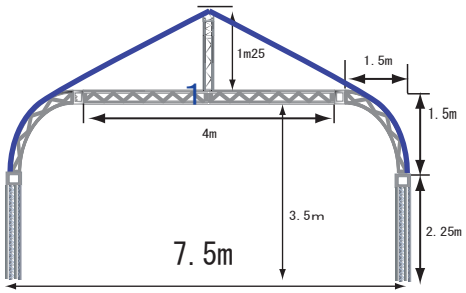

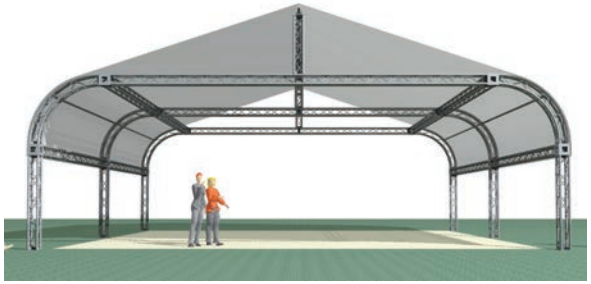
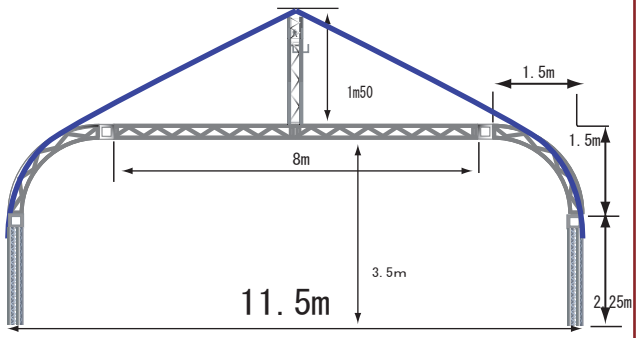
Large 1W